INC10

Real time IoT-Based Sensor System for Monitoring Corrosion Under Insulation

Department of Control System and Instrumentation Engineering, Faculty of Engineering, KMUTT

Mr.Suriya Thurat, Mr.Natthanon Sochue

Advisor : Asst. Prof. Dr. Sarawan Wongsa, Assoc. Prof. Dr. Isaratat Phung-on

Abstract

Corrosion Under Insulation (CUI) is a critical industrial issue that is difficult to detect and impacts safety. This project develops a real-time sensor system to measure corrosion rates and transmit data wirelessly for remote monitoring. Utilizing the electrochemical principles of a galvanic cell between carbon steel and stainless steel 304, the system generates a current proportional to the corrosion rate. Designed for ultra-low power consumption allowing 1-2 weeks of operation, the system features high-resolution signal conditioning and amplification circuits working in conjunction with the microcontroller's internal Analog-to-Digital Converter (ADC). Processing and system control are handled by an energy-efficient NUCLEO-L476RG (STM32) microcontroller utilizing STOP 2 Mode for effective power management, paired with a long-range LoRa wireless communication module (SX1278 at 433 MHz). Data is transmitted to calculate corrosion rates using Faraday's law and displayed on a dashboard, supporting predictive maintenance and reducing the risk of equipment damage in industrial settings.

Project Overview

This IoT-based system enables real-time, non-destructive CUI (Corrosion Under Insulation) monitoring by integrating galvanic sensors with long-range LoRa technology. It features a battery-optimized architecture of Sensor Nodes and a Gateway. By continuously measuring electrochemical parameters to calculate corrosion rates, it provides reliable web dashboard tracking. This solution effectively supports predictive maintenance, enhancing the safety and longevity of industrial assets.

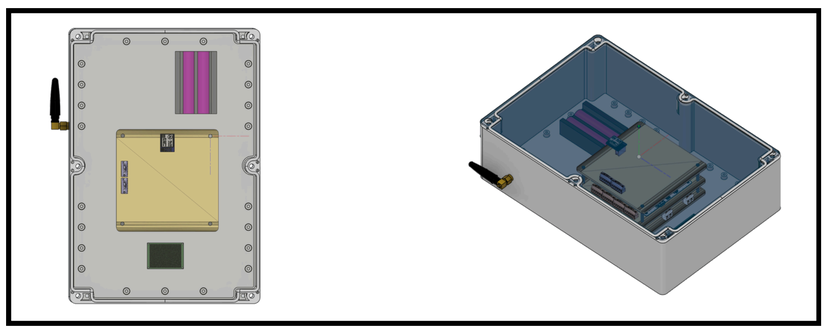

Figure 1: Sensor Node Design (Left: Front View, Right: Isometric View)

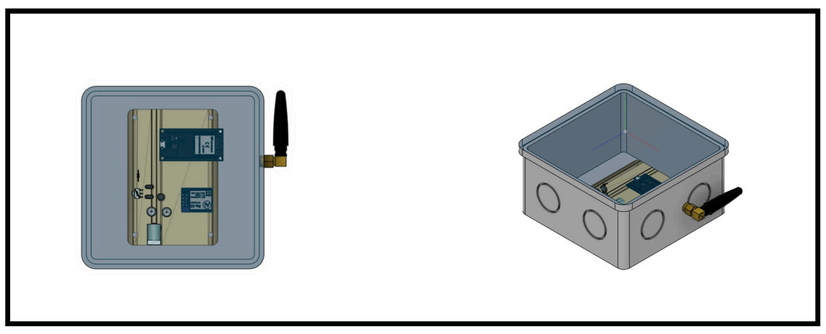

Figure 2: Gateway Unit Design (Left: Front Panel, Right: Isometric Render)

Methodology

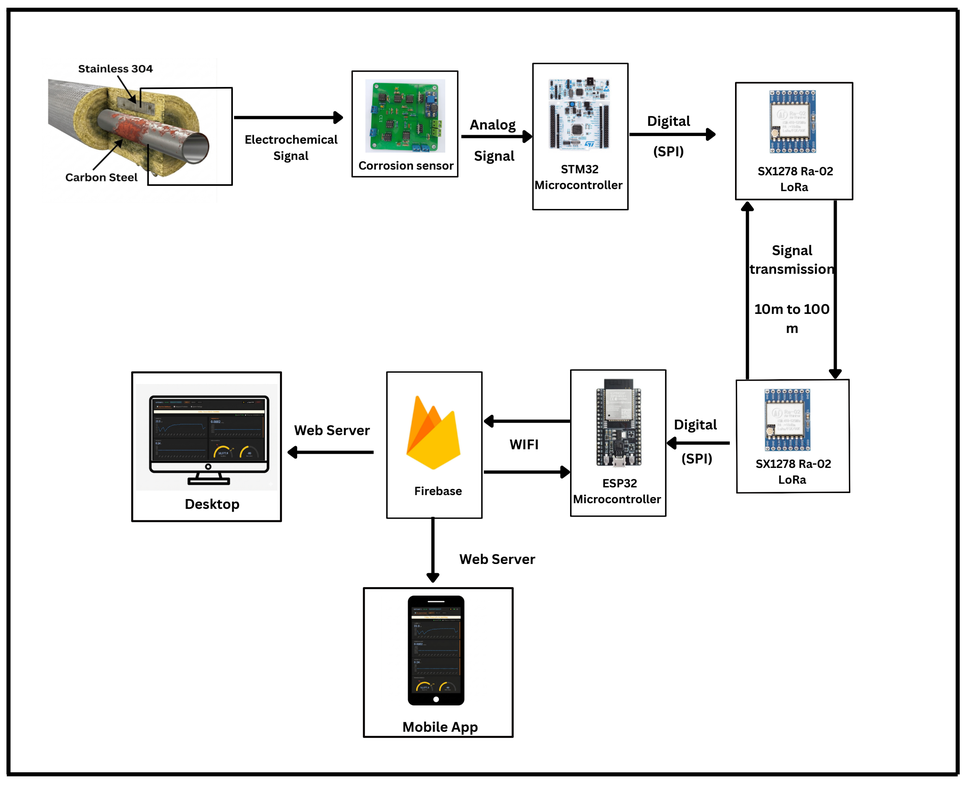

Figure 3: System Architecture and Data Flow Diagram

The system operates by capturing electrochemical signals generated between the carbon steel pipe and stainless 304 cladding via a dedicated corrosion sensor board. These signals are processed as analog inputs by an STM32 MCU. The data is then digitized and transmitted via an SPI interface to an SX1278 LoRa module, providing reliable wireless communication over a 10 to 100-meter range. On the receiving end, an ESP32 gateway collects and uploads the continuous dataset to Firebase via Wi-Fi, enabling real-time monitoring and visualization on both desktop and mobile dashboards.

References

[1] Poma Architectural Metals, Galvanic Corrosion: A Guide for Architecture [Online], Available: https://pomametals.com/how-to-prevent-galvanic-corrosion/

[2] Félix, E., Corrosion under insulation: risks and early detection [Online], Available: https://inspenet.com/en/author/felix-pino/

Results

Transmission distance (m)	Indoor Environment	Outdoor Environment
10	Signal Received	Signal Received
30	Signal Received	Signal Received
50	Signal Received	Signal Received
70	No Signal	Signal Received
100	No Signal	Signal Received

Table 1: Comparison of signal detection for LoRa between the sensor node and the ESP32 gateway at various distances in indoor and outdoor environments

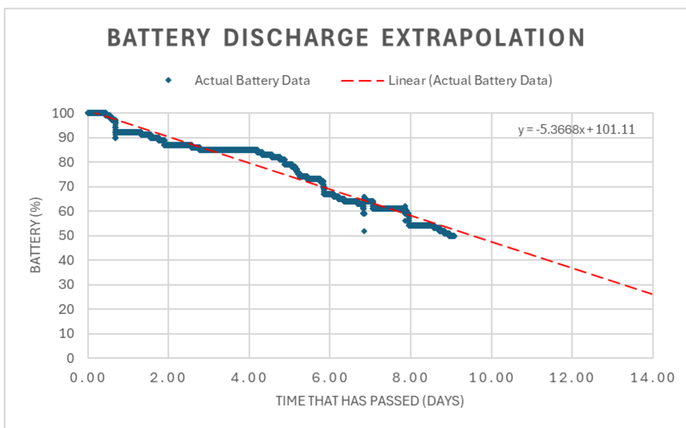

Figure 4: Battery depletion over 8 days, projected to last over 14 days

The graph illustrates the battery level variation of the sensor node over an 8-day period. Based on the observed data, a linear extrapolation method was applied to estimate future battery consumption. The results indicate that the sensor node is expected to continue operating for approximately 14 days or longer.

Parameters	Mass Loss CR (mm/y)	System CR (mm/y)	Absolute Error (mm/y)	% Error
Test Results	0.02775	0.03070	0.00295	10.63%

Table 2: Comparison of Corrosion Rate between Sensor System and Mass Loss Method

Table 2 validates the sensor's real-time Corrosion Rate (CR) calculated via ASTM G102 against the baseline ASTM G1 mass loss method. The system demonstrates a minimal absolute error of 0.00295 mm/y (10.63%). This deviation is highly acceptable given the dynamic nature of electrochemical measurements versus cumulative mass loss, confirming the system's reliability for continuous monitoring.

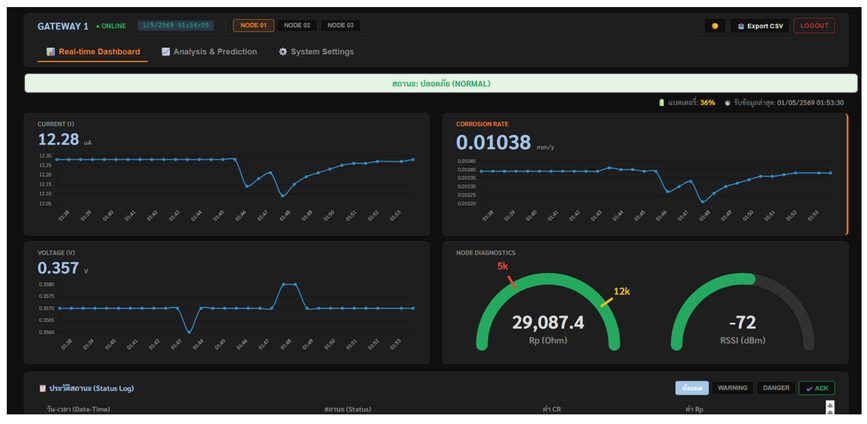

Figure 5: Real-Time Monitoring Dashboard

The developed dashboard is capable of displaying corrosion-related parameters, including corrosion current, corrosion voltage, and corrosion rate, along with the system status log, in real time. In addition, the system can monitor the battery level of the sensor node in real time, enabling users to track the operational readiness of the device. Users can download historical data, including corrosion rate, current, voltage, and battery level, in CSV format by clicking the “Export CSV” button. The exported data covers the entire period since the sensor node began operation.

Conclusion

The developed IoT system successfully enables real-time remote monitoring by accurately measuring the voltage and current generated by electrochemical reactions. By wirelessly transmitting this data, the system allows for continuous analysis without the need for insulation removal, directly supporting cost-effective predictive maintenance.